Fig. 37: 5.7L VIN R, Instrument Cluster Circuit

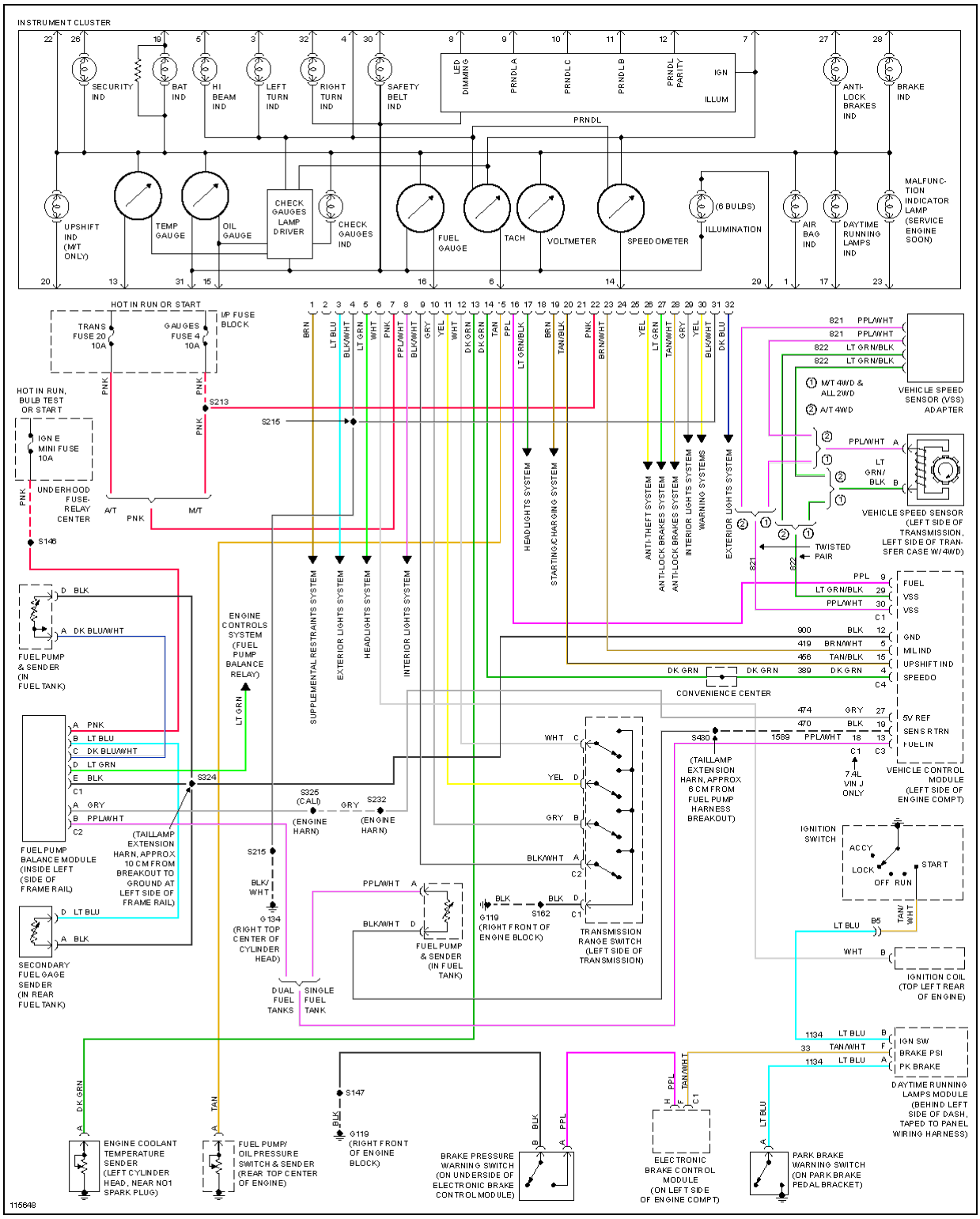

© 2011 Mitchell Repair Information Company, LLC.