Fig. 20: Exterior Lamps Circuit (2 of 2)

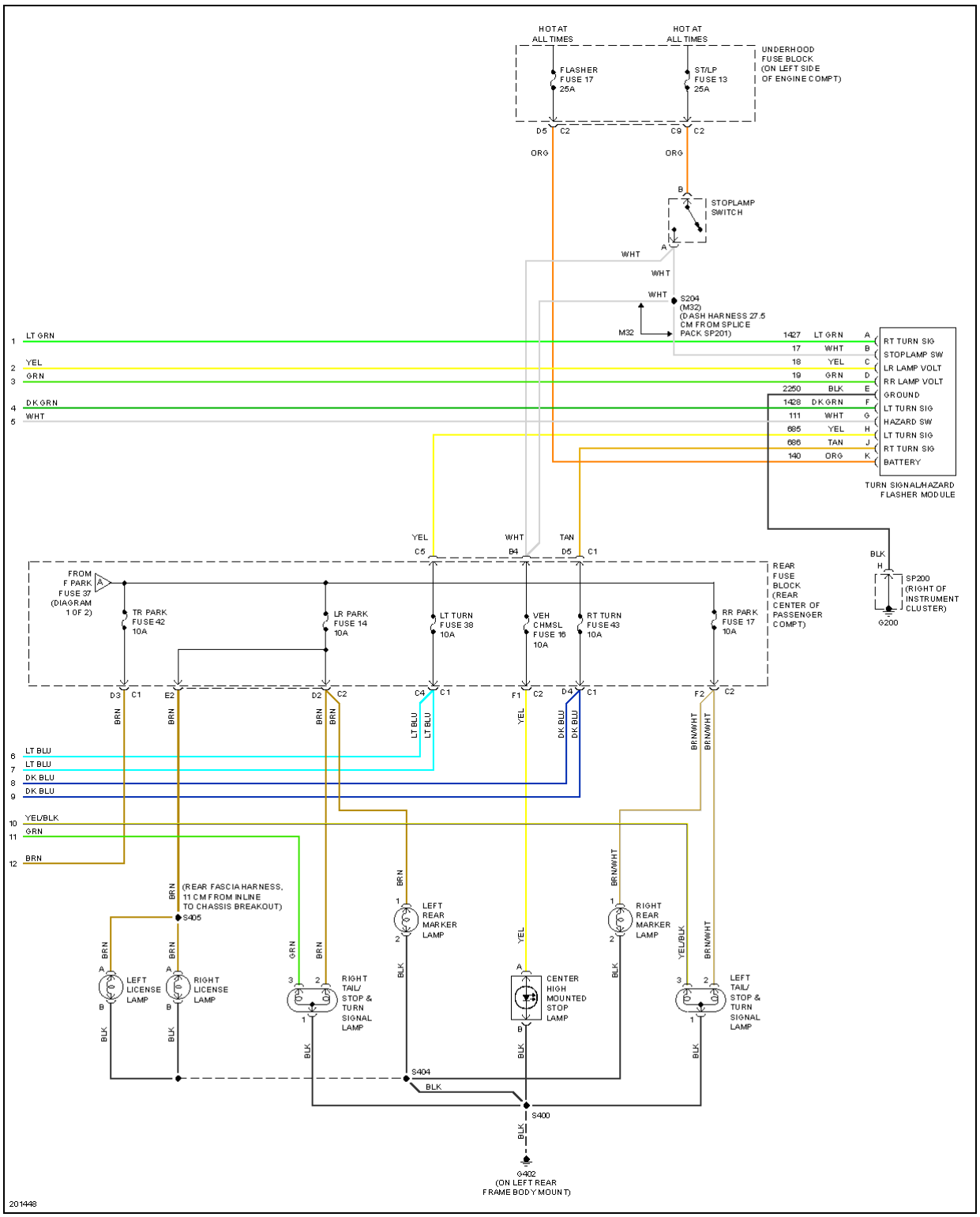

© 2011 Mitchell Repair Information Company, LLC.